Wenger®

Assembly Instructions

STRATA® Event Staging and Tent Flooring Accessories

Beam Link
Guardrail
Rail Plate
Stairway Attachment
Cross Bracing
Articulating Leveling Foot

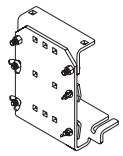

Rail Plate Assembly

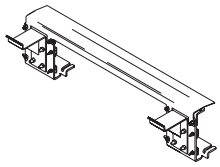

Stairway Attachment with two Rail Plate Assemblies

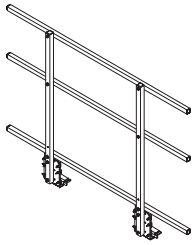

Guardrail Assembly with two Rail Plate Assemblies

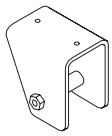

Beam Link Assembly

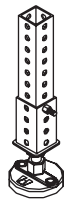

Articulating Leveling Foot

CONTENTS

Important User Information 2
General 2
Manufacturer 2
Strata® Event Staging and Tent Floor Intended Use . . .2
Accessories Intended Use 2
Installation 3
Guardrail Specifications 3
Fasteners and Parts List 4
Fasteners 4
Required Tools 4
Rail Plate Kit Parts 5
Guardrail Kit Parts 5
Stairway Attachment Kit Parts 5
Cross Bracing Kit Parts 6
Beam Link Kit Parts 6
Articulating Leveling Foot Kit Parts 6
Guard Rail Assembly 7
Assemble the Rails and Uprights 7
Assemble the Guardrail Assembly and Rail Plate 8
Attach the Guardrail to A Leveled Deck Main Beam . . .9
Attach the Guardrail to A Leveled Deck Spanner Beam 10
End User Guard Rails 11
Beam Link Assembly 12
Ramp Assembly 12
Connecting a Laydown Floor to a Leveled Deck 13
Stairway Attachment 14
Assemble Stairway Attachment 14
Attach A Stairway Attachment to A Deck Main Beam . . .15
Attach A Stairway Attachment to A Deck Spanner Beam 16
Articulating Leveling Foot 18
Cross Bracing 19
Warranty 20

Note: Please read and understand these Installation Instructions before installing any STRATA® Event Staging and Tent Floor Accessories.

Note: Refer to the illustrations on the following pages. If you need additional information about your STRATA® Event Staging and Tent Floor Accessories, write, telephone or email Wenger Corporation at the number or address below.

Note: It is recommended that two people work together for some installation steps.

©Wenger Corporation 2005
Printed in USA 09/05 Part #183A307-02

Wenger Corporation, 555 Park Drive, P.O. Box 448, Owatonna, Minnesota 55060-0448
Questions? Call.....USA: (800) 733-0393 • International (call collect): (507) 455-4100 • www.wengercorp.com

IMPORTANT USER INFORMATION

GENERAL

Copyright © 2005 by Wenger Corporation

All rights reserved. No part of the contents of this manual may be reproduced, copied, or transmitted in any form or by any means including graphic, electronic, or mechanical methods or photocopying, recording, or information storage and retrieval systems without the written permission of the publisher, unless it is for the purchaser's personal use.

Printed and bound in the United States of America.

The information in this manual is subject to change without notice and does not represent a commitment on the part of Wenger Corporation. Wenger Corporation does not assume any responsibility for any errors that may appear in this manual.

In no event will Wenger Corporation be liable for technical or editorial omissions made herein, nor for direct, indirect, special, incidental, or consequential damages resulting from the use or defect of this manual.

The information in this document is not intended to cover all possible conditions and situations that might occur. The end user must exercise caution and common sense when assembling or installing Wenger Corporation products. If any questions or problems arise, call Wenger Corporation at 800-733-0393.

MANUFACTURER

The STRATA® Event Staging and Tent Floor Accessories are manufactured by:

Wenger Corporation
555 Park Drive
Owatonna, MN 55060
1-507-455-4100 • 1-800-733-0393
www.wengercorp.com

STRATA® EVENT STAGING AND TENT FLOOR INTENDED USE

The Wenger STRATA® Event Staging and Tent Floor is intended to be used inside and outside during fair weather conditions with the following limitations.

- The STRATA® Event Staging and Tent Floor Accessories are not intended to be exposed for extended periods of wet and humid conditions or to severe outdoor weather conditions.
- The STRATA® Event Staging and Tent Floor Accessories are intended to be used in a way that complies with the recommended load limits defined in this manual, complies with the statements of intended use in this manual, and complies with all warnings and cautions defined in this manual.
- The STRATA® Articulating Leveling Foot is intended to support a maximum load limit of 8,000-pounds (3636 Kg) for each Foot.
- The STRATA® Articulating Leveling Foot, when used on finished floor surfaces, is intended to have a pad between the floor surface and the bottom surface of the Foot.
- The STRATA® Event Staging is intended to use Cross Bracing when the Stage height is greater than 48-inches (1.22 m).

ACCESSORIES INTENDED USE

- STRATA® Event Staging and Tent Floor Accessories are intended to be used only with STRATA® Event Staging and Tent Floor components.
- STRATA® Event Staging and Tent Floor Accessories are intended to be installed and used as described in these instructions and in the *STRATA® Event Staging and Tent Floor Owner's Manual*.

IMPORTANT USER INFORMATION CONTINUED

INSTALLATION

- The STRATA® Event Staging and Tent Floor Accessory installation and use must comply with local regulations and codes.
- All personnel (including all temporary workers) installing or maintaining the STRATA® Event Staging and Tent Floor Accessories must read and understand this entire manual and other related installation instructions.

GUARDRAIL SPECIFICATIONS

Warning! ***The STRATA® Event Staging and Tent Floor Rail Plate Assembly can be used by the end user to construct guardrails by attaching end user supplied uprights and rails. The design must comply with the International Building Code specifications and local codes and regulations and the information on page 11. Failure to meet these specifications may result in damage to property, serious injury, or death!***

Warning! ***In no event will Wenger Corporation be liable for direct, indirect, special, incidental, or consequential damages resulting from the end user design and construction of guardrails using materials other than STRATA® Event Staging and Tent Floor Accessories attached to STRATA® Event Staging and Tent Floor Leveled Deck components. The operator must observe local regulations and exercise caution and common sense when constructing his own guardrails.***

Any end user guardrail design must comply with the following International Building Codes:

The *International Building Code*, section 1607.7.1 states:

> *Handrail assemblies and guards shall be designed to resist a load of 50 pounds per linear foot (0.73 kN/m) applied in any direction at the top and to transfer this load through the support structure.*

The *International Building Code*, section 1607.7.1.1 states:

> *Handrail assemblies and guards shall be able to resist a single concentrated load of 200 pounds (0.89 kN), applied in any direction at any point along the top, and have attachment devices and supporting structure to transfer this loading to appropriate structural elements of the building. This load need not be assumed to act concurrently with loads specified in the preceding paragraph [section 1607.7 above].*

The *International Building Code*, section 1607.7.1.2 states:

> *Intermediate rails (all those except the handrail), balusters and panel fillers shall be designed to withstand a horizontally applied load of 50 pounds (0.22 kN) on an area not to exceed 1 square foot (305 mm²) including openings and space between rails. Reactions due to this loading are not required to be superimposed with those of either preceding paragraph.*

The *International Building Code*, section 1607.7.1.2 states:

> *When a handrail and guards are designed in accordance with the provisions for allowable stress design (working stress design) exclusively for the loads specified in Section 1607.7.1, the allowable stress for the members and their attachments are permitted to be increased by one-third.*

REQUIRED TOOLS

The only tools required for assembly of Strata System Accessories, except for a Ramp Assembly and Articulating Leveling Foot Accessory, are 9/16-inch open-end wrenches. To assemble a Ramp Assembly with Beam LInks and Beam Caps, a cordless drill, a phillips bit, a 7/16-inch hex nut driver bit, a 9/32-inch drill bit, and a 1/4-inch drill bit are required. The Articulating Leveling Foot Accessory requires a 1-1/8-inch open end wrench.

9/16-inch Open-end Wrench

7/16-inch Open-end Wrench

Cordless Drill

1-1/8-inch Open-end Wrench

1/4, 7/16-inch Drill Bit

Phillips Bit

7/16-inch Hex Nut Driver Bit

FASTENERS AND PARTS LIST

To order replacement parts, refer to the *STRATA® Event Staging and Tent Floor Owner's Manual* for part numbers.

FASTENERS

The full scale fasteners shown below are contained in various Accessory kits. Any fasteners remaining when an the installation is complete should be discarded.

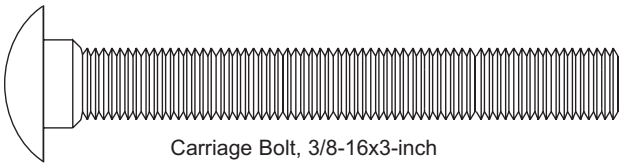

Carriage Bolt, 3/8-16x3-inch

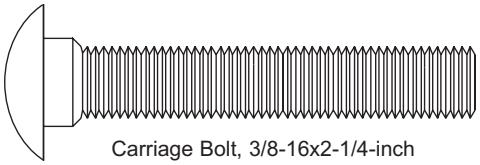

Carriage Bolt, 3/8-16x2-1/4-inch

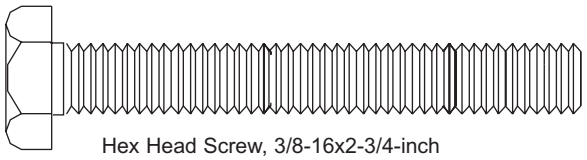

Hex Head Screw, 3/8-16x2-3/4-inch

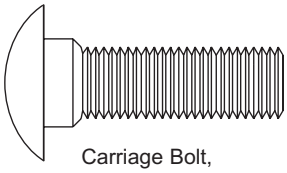

Carriage Bolt, 3/8-16x1-1/4-inch

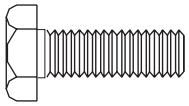

Hex Head Screw, 1/4-20x3/4-inch

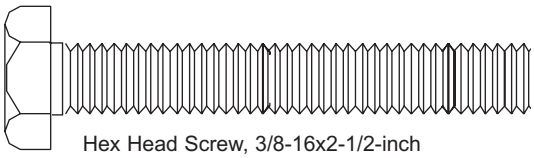

Hex Head Screw, 3/8-16x2-1/2-inch

Hex Nut, 1/4-20

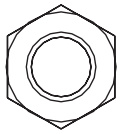

Hex Nut, 3/8-16

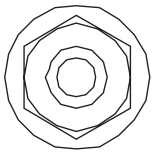

Hex Nut, Flange, 3/8-16

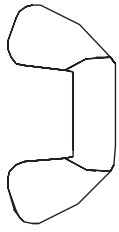

Wing Nut, 5/16-18

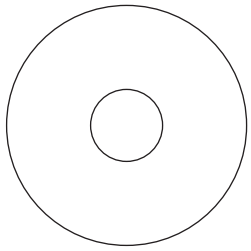

Flat Washer, 3/8-inch x 1-1/4-inch

FASTENERS AND PARTS LIST CONTINUED

RAIL PLATE KIT PARTS

Item	Qty	Description
1	2	Rail Plate Assembly
2	8	Hex Nut, 3/8-16, Zinc Plated**
3	8	Carriage Bolt, 3/8-16x3-inches, Zinc Plated**

** Refer to *Fasteners*, page 4

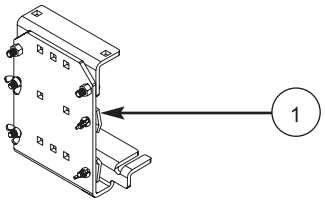

GUARDRAIL KIT PARTS

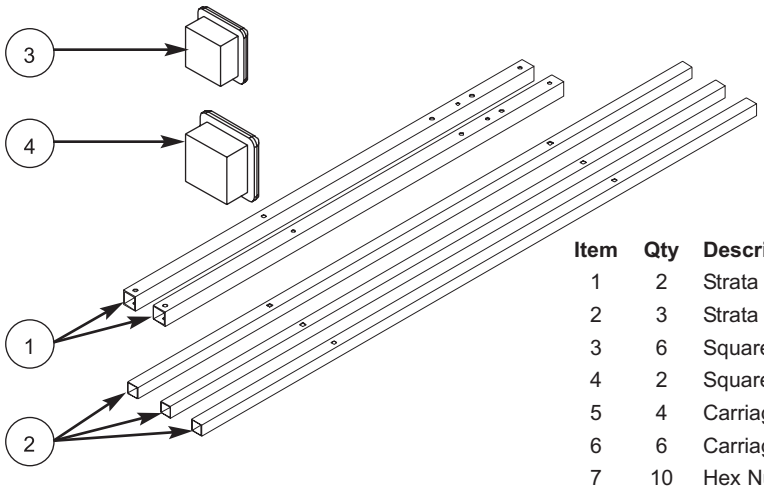

Item	Qty	Description
1	2	Strata Guardrail Upright
2	3	Strata Rail (48, 72, or 96-inch)
3	6	Square Plug, 1-1/4-inch, 20-gage, Black*
4	2	Square Plug, 1-1/2-inch, 14-gage, Black**
5	4	Carriage Bolt, 3/8-16x2-1/4-inches, Zinc Plate***
6	6	Carriage Bolt, 3/8-16x3-inches, Zinc Plate***
7	10	Hex Nut, Flanged, 3/8-16, Zinc Plate***

* Pre-assembled to the Strata Rails
** Pre-assembled to the Strata Guardrail Uprights
*** Refer to *Fasteners*, page 4

STAIRWAY ATTACHMENT KIT PARTS

Item	Qty	Description
1	8	Carriage Bolt, 3/8-16x3-inches, Zinc Plated**
2	8	Hex Nut, 3/8-16, Zinc Plated**
3	1	Strata Step Plate
4	2	Strata Stairway Attachment Plate

** Refer to *Fasteners*, page 4

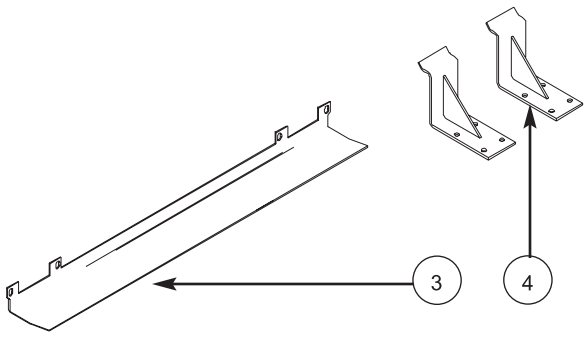

FASTENERS AND PARTS LIST CONTINUED

BEAM LINK KIT PARTS

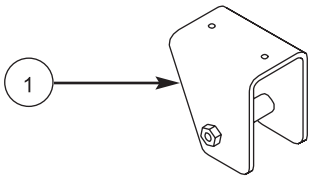

Item	Qty	Description
1	2	Beam Link Assembly
2	4	Cap Screw, 1/4-20x3/4-inch, Grade 5**
3	4	Hex Nut, Nylok, 1/4-20, Zinc Plate**

** Refer to *Fasteners*, page 4

CROSS BRACING KIT PARTS

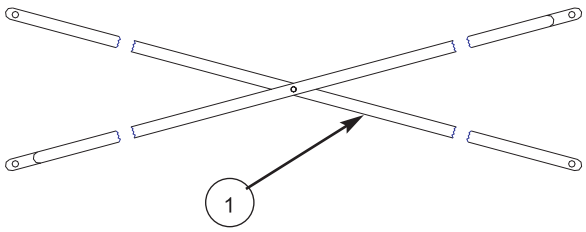

Item	Qty	Description
1	2	Cross Brace Assembly***
2	8	Hex Head Screw, 3/8-16x2-3/4**
3	8	Locknut, 3/8-16**
4	8	Flat Washer, 3/8-inch x 1-1/4-inch

** Refer to *Fasteners*, page 4

*** 3-foot Cross Brace or 4-foot Cross Brace

ARTICULATING LEVELING FOOT KIT PARTS

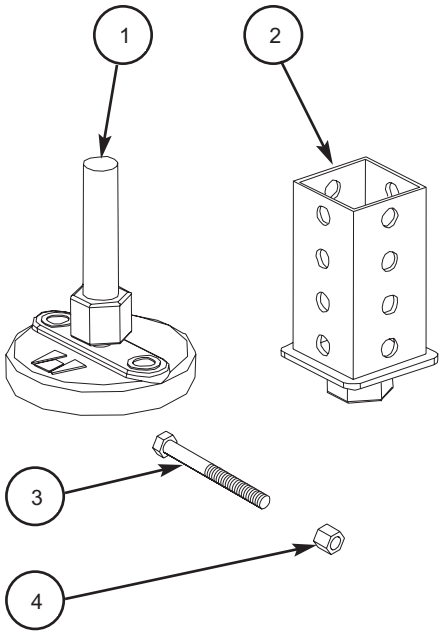

Item	Qty	Description
1	1	Articulating Leveling Foot
2	1	Leveling Foot Tube
3	1	Hex Head Screw, 3/8-16x2-1/2-inch
4	1	Locknut, 3/8-16

GUARD RAIL ASSEMBLY

ASSEMBLE THE RAILS AND UPRIGHTS

Guardrail Assemblies are available in three sizes: four-foot, six-foot, and eight-foot lengths. The assembly procedure is the same for all sizes.

1. Remove the three Rails, two Uprights, and the Hardware Pack from the Shipping Carton.
2. Inventory the Hardware Pack and make that all of the Fasteners are present.
3. Using a 9/16-inch Open-end Wrench, attach the two Uprights to the three Rails with six Carriage Bolts, 3/8-16x3-inches, and six Flanged Hex Nuts, 3/8-16, as shown below.
   a. Insert the Carriage Bolt through the Rail square clearance hole and then through the Upright.
   b. Attach the Flange Nut with the flange against the Upright.

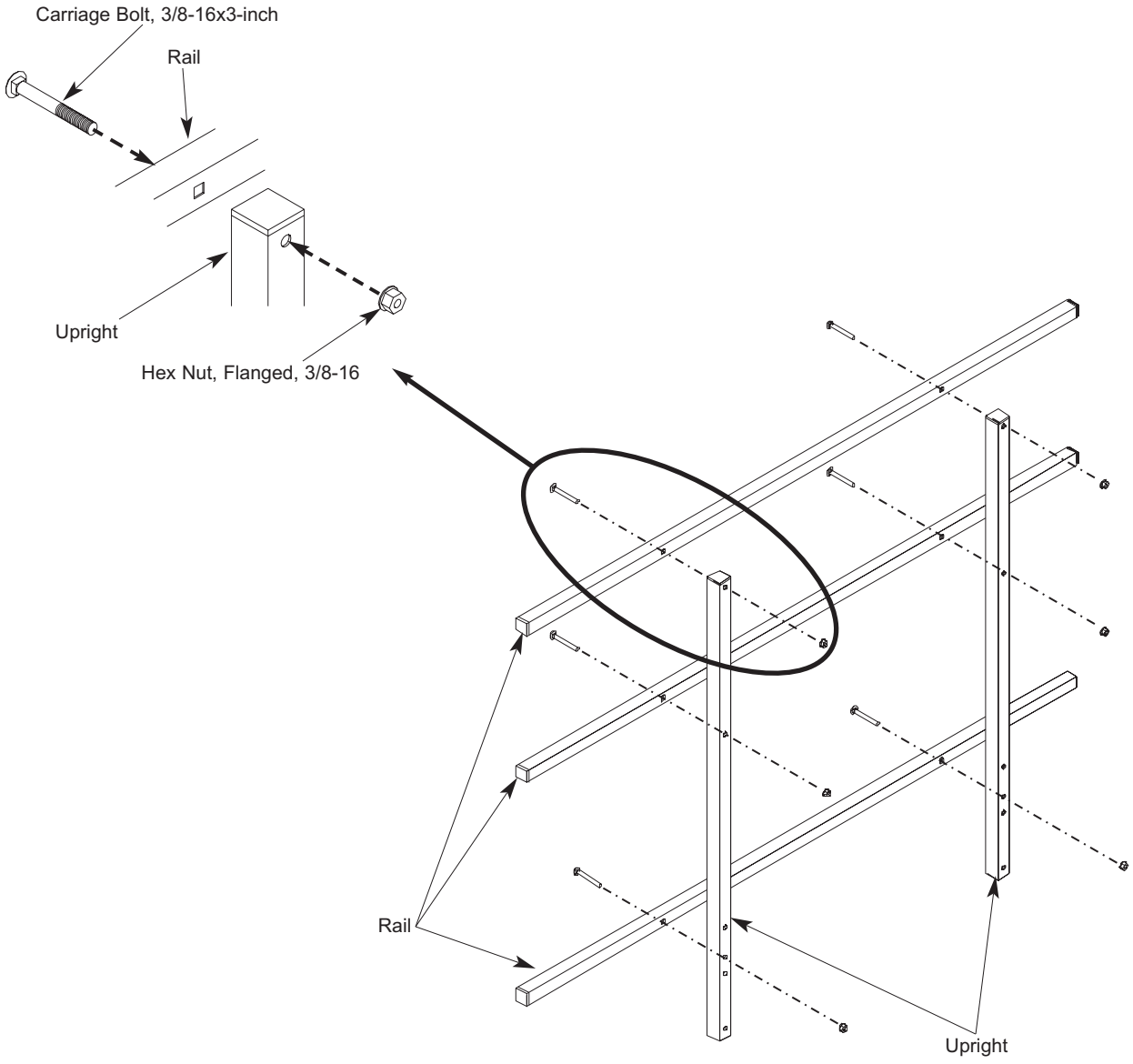

GUARD RAIL ASSEMBLY CONTINUED

ASSEMBLE THE GUARDRAIL ASSEMBLY AND RAIL PLATE

Attach two Rail Plate Assemblies to the Guardrail Assembly as follows.

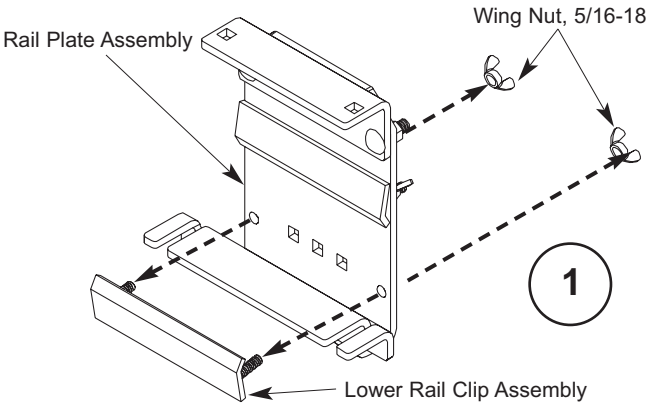

1. Remove the Lower Rail Clip Assembly from both Rail Plate Assemblies.
   a. Unscrew the two Wing Nuts, 5/16-18, that attach the Lower Rail Clip Assembly to the Rail Plate and set them aside.
   b. Remove the Lower Clip Assembly and set it aside.
2. Attach one of the two Rail Plate Assemblies to one Upright of the Guardrail Assembly as follows.
   a. Insert two Carriage Bolts, 3/8-16x1-1/4-inch, through the Rail Plate Assembly and Upright as shown below.
   b. Using a 9/16-inch Open-end Wrench, fasten two Flanged Hex Nuts, 3/8-16, to the Carriage Bolts.

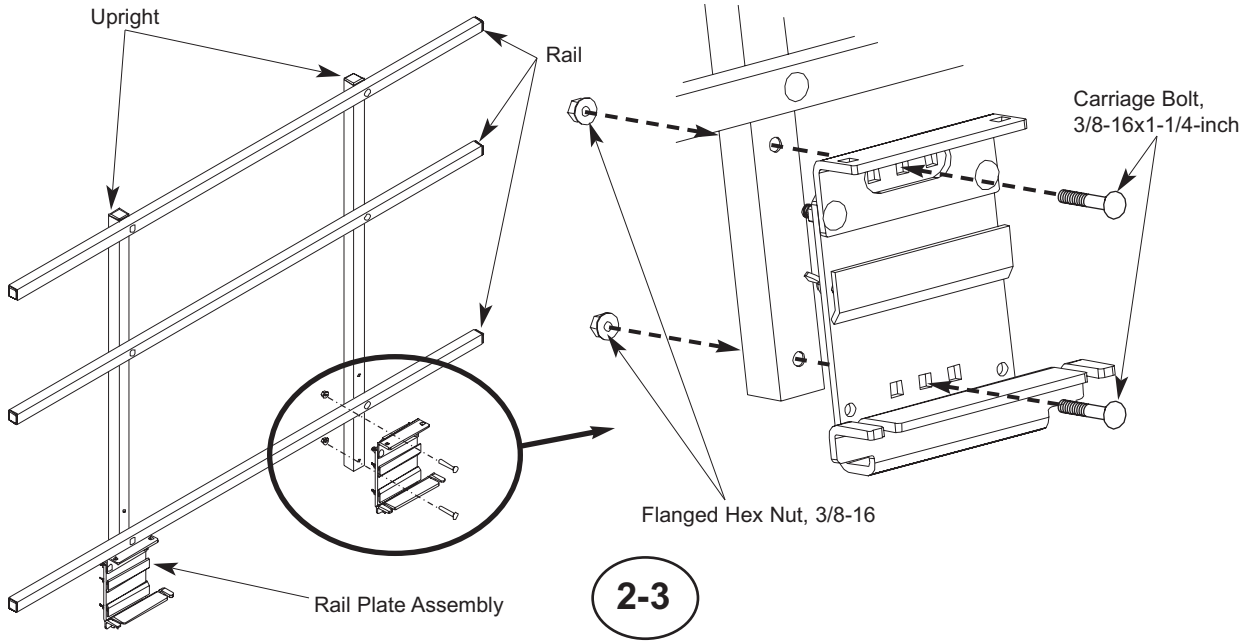

3. Attach the other Rail Plate Assembly to the other Upright as done in steps 2a and 2b.
4. Re-attach the two Lower Rail Clip Assemblies with the Wing Nuts set aside in steps 1a and 1b.

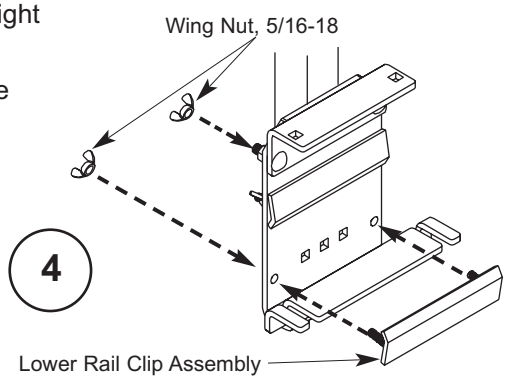

⚠ WARNING

Two or more people should always work together when assembling the Guardrails.

GUARD RAIL ASSEMBLY CONTINUED

ATTACH THE GUARDRAIL TO A LEVELED DECK MAIN BEAM

Attach the Guardrail and Rail Plate Assembly to a Leveled Deck Main Beam as follows.

Warning! Two or more persons should always work together when attaching the Guardrail Assembly to a leveled deck. Failure to observe this caution can result in damage to property or serious injury!

1. Loosen the four Wing Nuts that fasten the two Rail Clip Assemblies to each Rail Plate Assembly.
2. With two people working together, place each Rail Plate Assembly Lower Flange under the Main Beam.with the Guardrail Assembly at a slight angle to the Main Beam as shown in illustration 1-2 at the right.
3. Attach each Rail Plate Assembly by engaging the Lower Clip Assembly with the Main Beam Lower Hook as shown in the illustration 3 at the right.
4. Keeping the Lower Clip Assembly engaged to the Main Beam Lower Hook, tilt the Guardrail Assembly to a vertical position as shown in illustration 4 below and place the Upper Rail Clip behind the Main Beam Upper Hook. Tighten the four Wing Nuts on each Rail Plate Assembly.

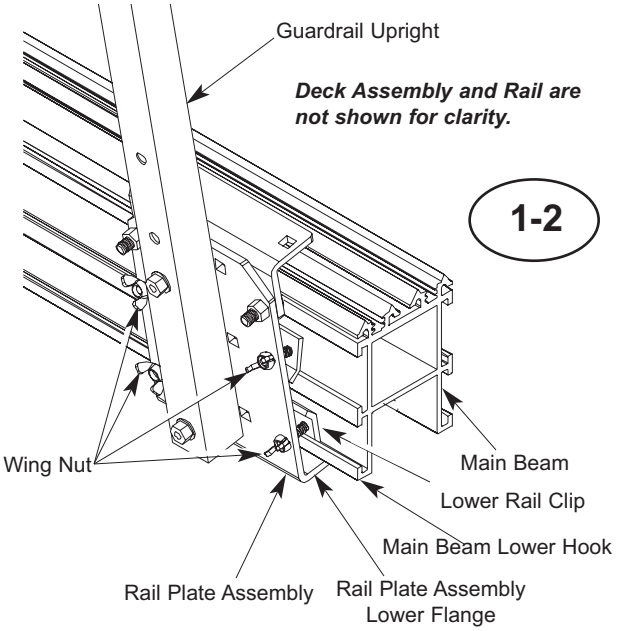

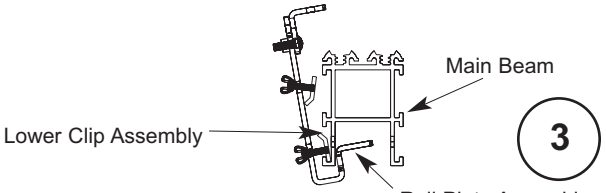

Rail Plate Assembly shown at an angle with the Main Beam

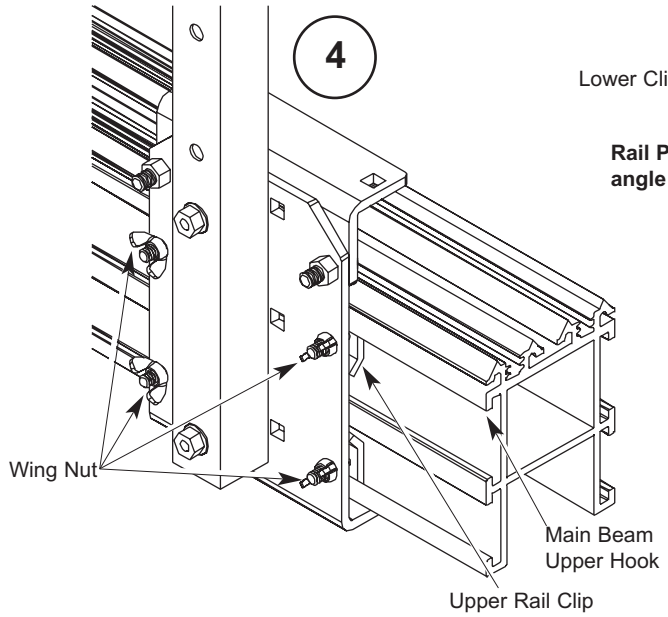

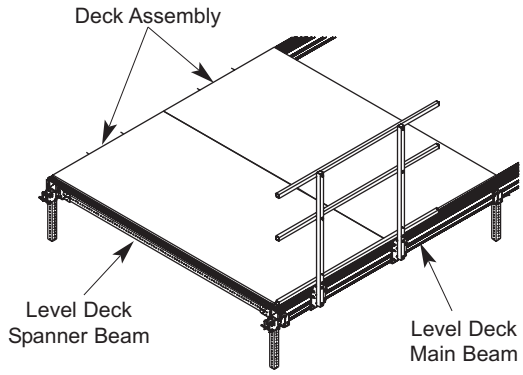

6-foot Guardrail Assembly shown attached to a Leveled Deck Main Beam

GUARD RAIL ASSEMBLY CONTINUED

ATTACH THE GUARDRAIL TO A LEVELED DECK SPANNER BEAM

Warning! ***Two or more persons should always work together when attaching the Guardrail Assembly to a leveled deck. Failure to observe this caution can result in damage to property or serious injury!***

1. Attach the Guardrail and Rail Plate Assemblies to a Leveled Deck Spanner Beam as follows.
   a. Loosen the two Hex Nuts, 3/8-16 (that fasten the Upper Flange to the Rail Plate, so that each Carriage Bolt head has about three-sixteenth-inch clearance from the Rail Plate Assembly Upper Flange as shown in illustration 1 at the right.
2. With two people working together, align the Carriage Bolt Heads to the Deck Side Beam Slot and slide the Bolt Heads (four Bolt Heads, two on each Rail Plate Assembly) into the Deck Side Beam Slot as shown in illustration 2 below. Position the Guardrail Assembly in the desired position, aligning Slots in the Lower Flange with clearance holes in the Spanner Beam.

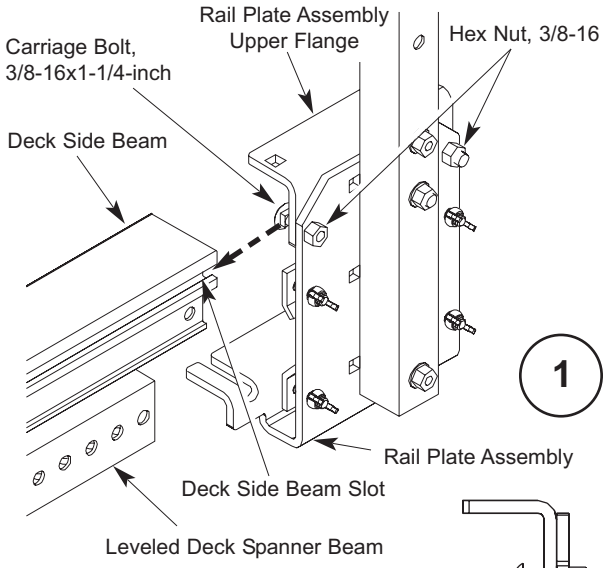

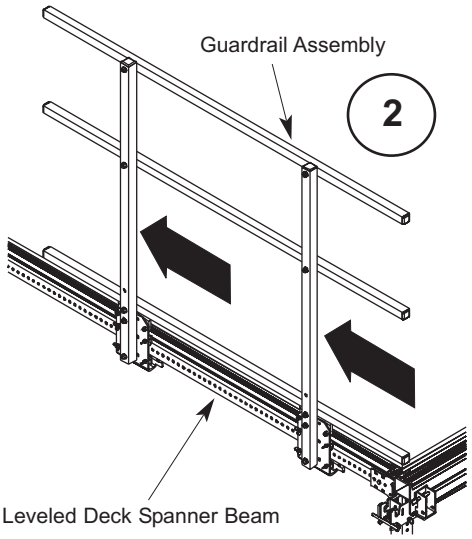

WARNING

Two or more people should always work together when assembling the Guardrails.

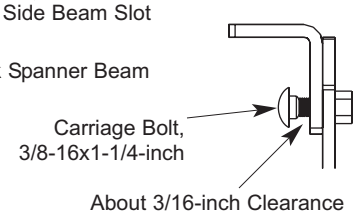

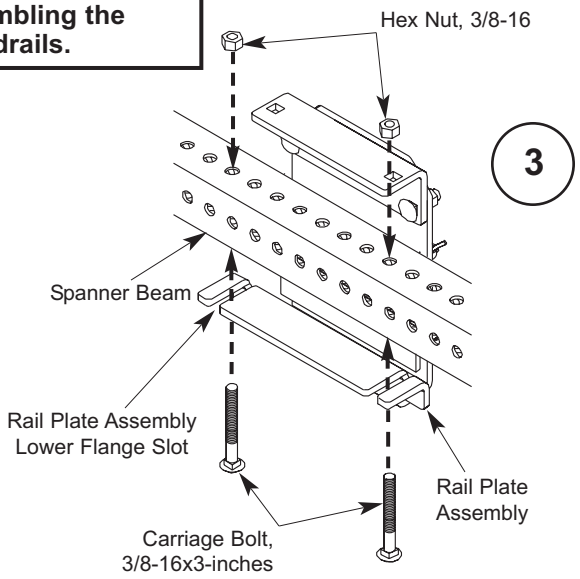

Deck and parts of the Guardrail and Rail Plate Assembly are not shown for clarity.

3. Insert two Carriage Bolts, 3/8-16x3-inches, upward through the two Rail Plate Assembly Lower Flange Slots and clearance holes in the Spanner Beam as shown in illustration 3 at the right. Make sure that the square neck of each Carriage Bolt fits into a Slot. Using the 9/16-inch Open-end Wrench, attach a Hex Nut, 3/8-16, to each Carriage Bolt and tighten.

GUARD RAIL ASSEMBLY CONTINUED

END USER GUARD RAILS

Warning! ***The STRATA® Event Staging and Tent Floor Rail Plate Accessory can be used to construct guardrails by the end user. The design must comply with the International Building Code specifications and local codes and regulations. Failure to comply with these specifications and regulations can result in damage to property, serious injury, or death!***

Warning! ***In no event will Wenger Corporation be liable for direct, indirect, special, incidental, or consequential damages resulting from the end user design and construction of guardrails from materials other than STRATA® Event Staging and Tent Floor Accessories attached to STRATA® Event Staging and Tent Floor components. The end user must observe local regulations and exercise caution and common sense when constructing his own guardrails.***

If end users design, construct, and attach guard rails to a Leveled Deck using the Rail Plate Assemblies, the guard rails must:

- Comply with all of the warnings in this manual.
- Comply with the *Important End User Information* on page 2 and 3.

Examples of Guardrail uprights that can be constructed by an end user are shown below. The choice of materials and specific design is solely the responsibility of the end user. The suggested minimum size of materials for an upright are:

- Steel square tube no smaller than 1-1/4-inches square with at least a 16 gage (.0598-inch) wall thickness.
- Wood boards no smaller than 2x2 in size.
- Minimum fastener size used for attachment to a Rail Plate Assembly is a 3/8-16 Carriage Bolt.
- Wood boards must use a 3/8-inch flat washer between the board and Hex Nut attached to the Carriage Bolt.
- Always use at least two sets of fasteners to attach each upright to each Rail Plate Assembly.
- Always make sure that the fasteners are tight.

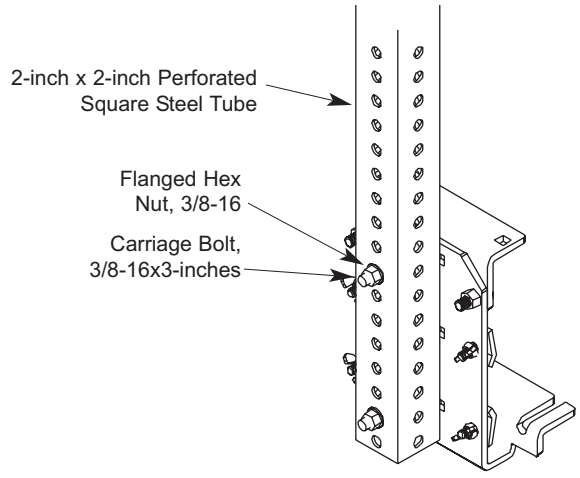

Example using Steel Tube

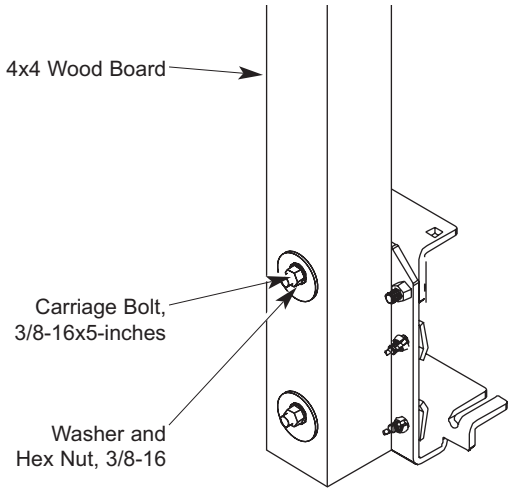

Example using a 4x4 Wood Board

BEAM LINK ASSEMBLY

RAMP ASSEMBLY

An inclined ramp can be constructed by connecting a pair of Double Beam Caps and a pair of Beam Links to the Leveled Deck as follows.

1. Using a Cordless Drill and a 9/32-inch Drill Bit, drill two 9/32-inch holes in each Double Beam Cap as shown at the right. ***<u>Use the Beam LInk as a template.</u> Mark the hole locations — do not attempt to drill through the Beam LInk clearance holes.***

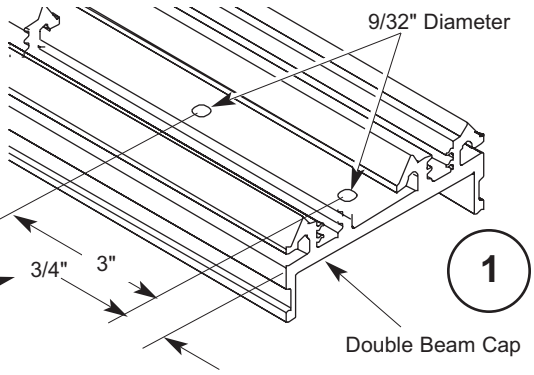

Use the Beam LInk as a template to mark the hole locations on the bottom side of the Double Beam Cap.

2. Attach a Beam Link to each Double Beam Cap:
   a. Align the two 9/32-inch Clearance Holes in the Beam Link to the two 9/32-inch Holes drilled in the Double Beam Cap in step 1.
   b. Insert two Hex Head Screws, 1/4-20x3/4-inch, through the two holes in the Beam Link and through the Double Beam Cap as shown in illustration 2 at the right.
   c. Using a pair of 7/16-inch Hex Nut Drivers, fasten two Nylok Hex Nuts, 1/4-20,. to the two Hex Head Screws.
3. Attach a 2x4 wood board (or 4x4 wood board) to the Double Cap Beam as follows. The end user must supply the four screws listed below.
   a. Using a cordless drill and a 1/4-inch drill bit, drill four 1/4-inch diameter clearance holes into the center slot of the Double Beam Cap as shown below.
   b. Fit a 2x4 Wood Board into the Double Beam Cap channel as shown below.
   c. Using a cordless drill and a phillips bit, fasten the Wood Board to the Beam Cap with four Pan Head Screws, Sheet Metal, 10x1-inch.

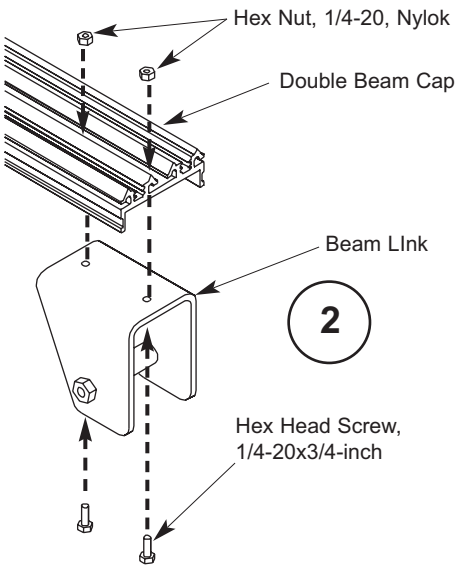

Note: The Board must be fastened to the Beam Cap every two to three feet.

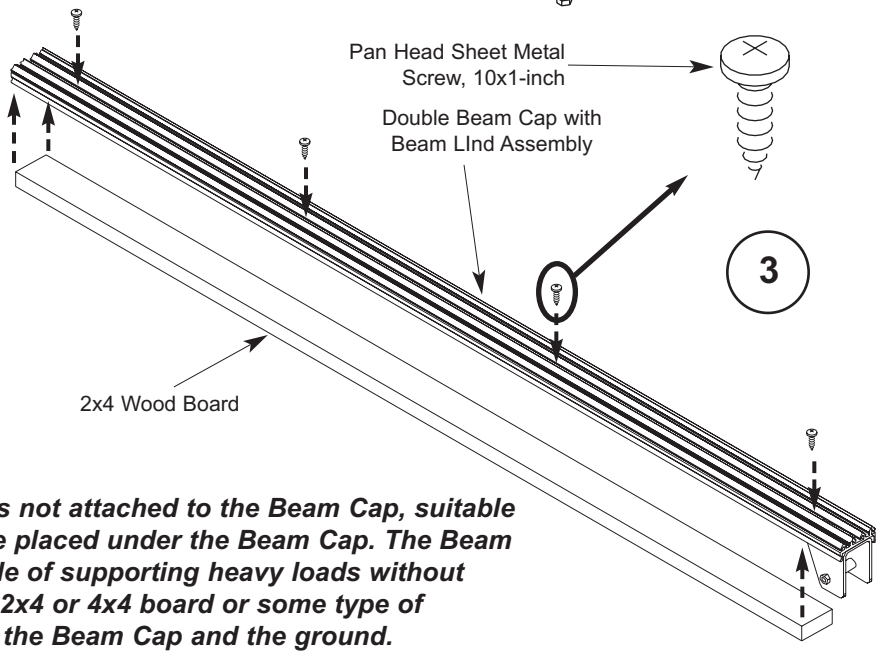

Warning! If a wood board is not attached to the Beam Cap, suitable supports must be placed under the Beam Cap. The Beam Cap is not capable of supporting heavy loads without support, either a 2x4 or 4x4 board or some type of support between the Beam Cap and the ground.

BEAM LINK ASSEMBLY CONTINUED

RAMP ASSEMBLY CONTINUED

4. Attach a Beam Cap Assembly to the Leveled Deck by inserting the Beam Link Spacer into the Interconnector as shown at the right.

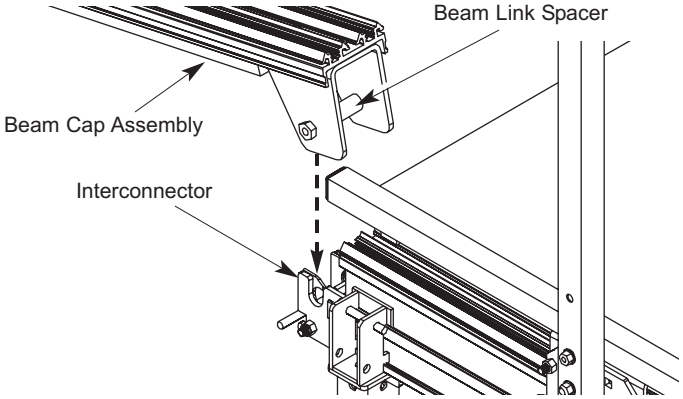

5. Complete the Ramp by attaching the other Beam Cap Assembly to the Leveled Deck and then placing Deck Assemblies onto the Beam Caps. Refer to the *STRATA® Event Staging and Tent Floor Owner's Manual* and the *STRATA®System Deck Kit Assembly Instructions* for more information.

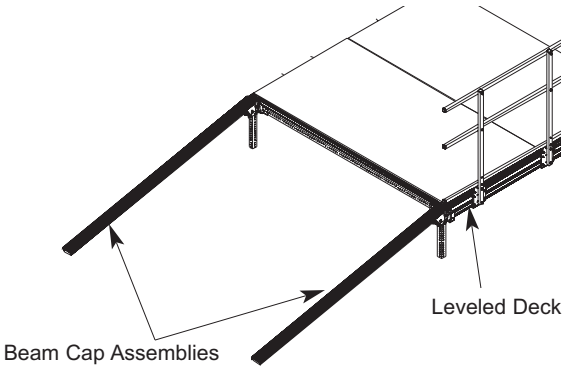

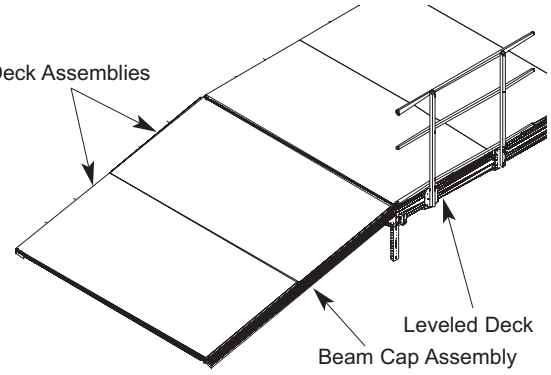

CONNECTING A LAYDOWN FLOOR TO A LEVELED DECK

A Laydown Floor can be connected to a Leveled Deck by attaching Beam LInk Assemblies to the Laydown Floor Beam Caps in the same way as done in steps 1, 2, 3, and 4 in the preceding section, *Ramp Assembly*. Refer to the *STRATA® Event Staging and Tent Floor Owner's Manual* and the *STRATA®System Deck Kit Assembly Instructions* for more information.

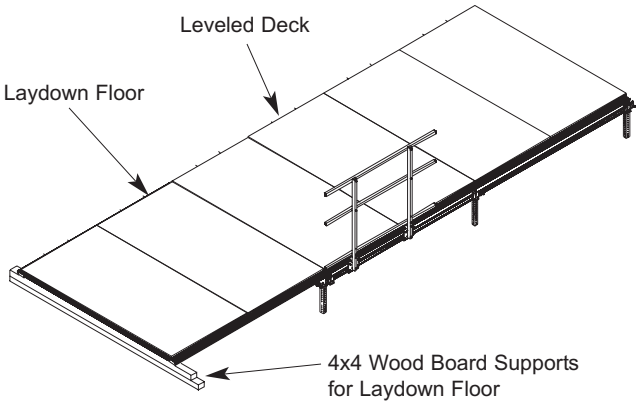

STAIRWAY ATTACHMENT

ASSEMBLE STAIRWAY ATTACHMENT

To assemble and attach a Stairway Attachment to a Leveled Deck, do as follows.

1. Remove the two Hex Nuts, 3/8-16, (finger tight) from the two Carriage Bolts, 3/8-16x1-1/4-inches, on the two Rail Plate Assemblies as shown at the right. Set the four Hex Nuts aside.

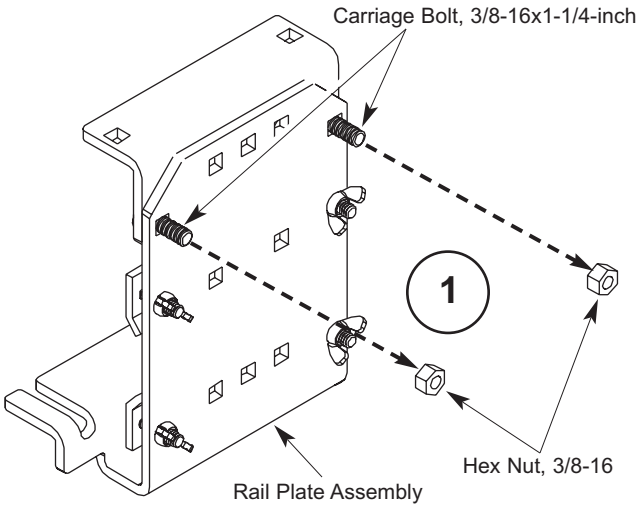

2. Attach the Rail Plate Assemblies to the Step Plate as follows.
   a. Insert the two Rail Plate Carriage Bolts through two clearance holes in the Step Plate as shown at the right.
   b. Using a 9/16-inch Open-end Wrench, attach and tighten a Hex Nut, 3/8-16, (set aside in step 1) to each Carriage Bolt as shown at the right.
   c. Repeat steps 2a and 2b with the other Rail Plate Assembly on the other end of the Step Plate.

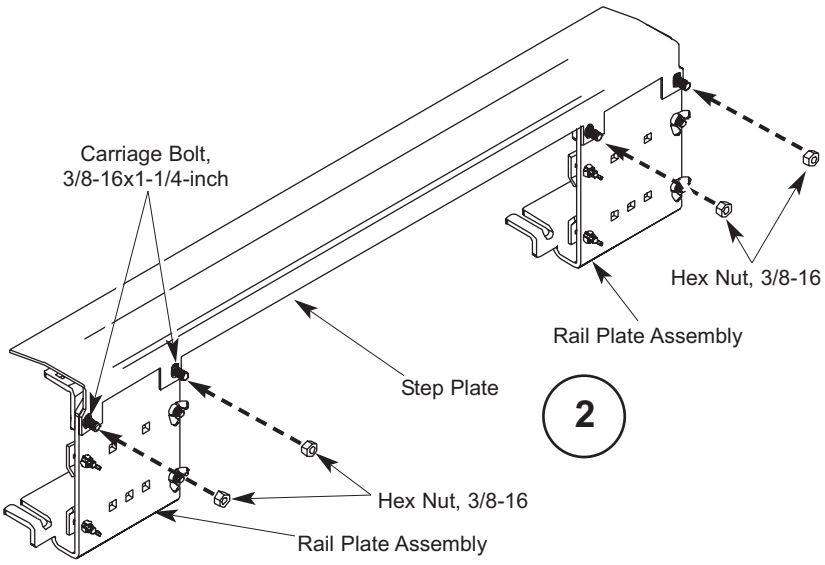

3. Attach two two Stairway Attachment Plates to the two Rail Plate Assemblies as follows.
   a. Insert four Carriage Bolts, 3/8-16x-1/4-inch, through the four square holes in the Rail Plate as shown at the right.
   b. Fit the Stairway Attachment Plate clearance holes onto the four Carriage Bolts and attach and tighten four Hex Nuts, 3/8-16, to each Carriage Bolt. Tighten with a 9/16-inch Open-end Wrench.
   c. Attach the other Stairway Attachment Plate to the Step Plate as done in Steps 3a and 3b.

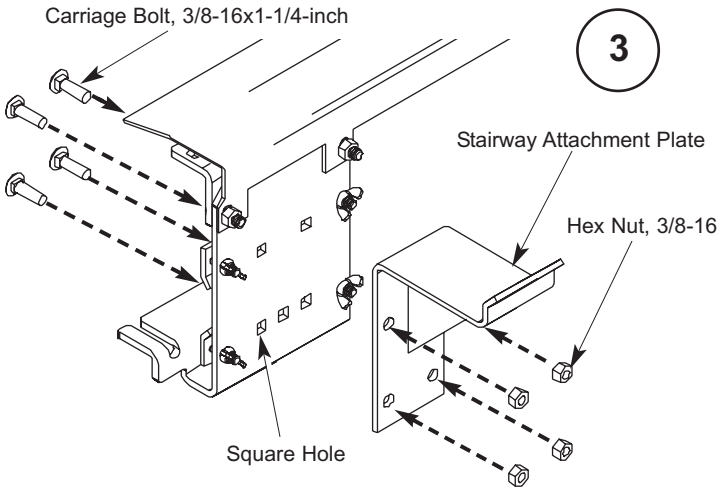

STAIRWAY ATTACHMENT CONTINUED

ATTACH A STAIRWAY ATTACHMENT TO A DECK MAIN BEAM

1. Loosen the four Wing Nuts that fasten the two Rail Clip Assemblies to each Rail Plate Assembly.
2. Place each Rail Plate Assembly Lower Flange under the Main Beam.with the Stairway Attachment Assembly at an angle to the Main Beam as shown below in illustration 1 at the right.

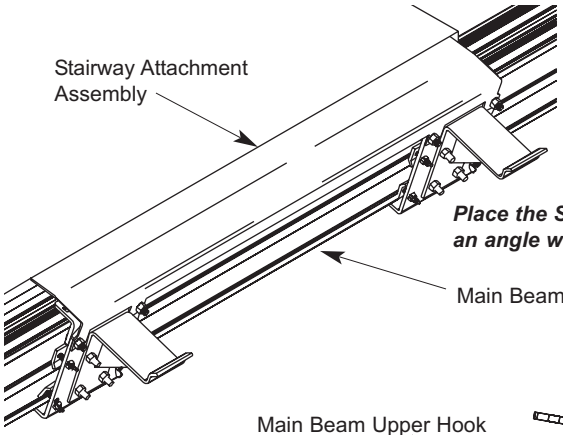

1-2

Place the Stairway Attachment at an angle with the Main Beam.

3. Attach each Rail Plate Assembly by engaging the Lower Clip Assembly with the Main Beam Lower Hook as shown in the illustration 3 at the right.

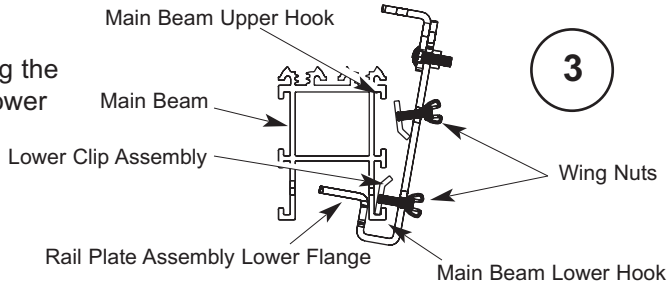

3

Rail Plate Assembly shown at an angle with the Main Beam

4. Keep the Lower Clip Assembly engaged to the Main Beam Lower Hook and tilt the Stairway Attachment to a vertical position as shown in illustration 4 at the right.

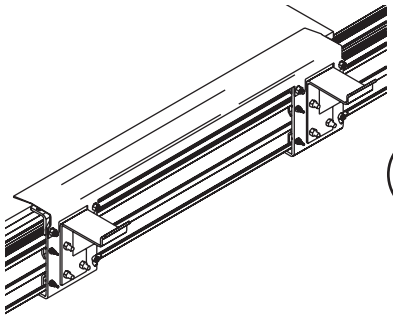

4

Rail Plate Assembly shown at an angle with the Main Beam

5. Place the Upper Rail Clip behind the Main Beam Upper Hook and tighten the four Wing Nuts on each Rail Plate Assembly as shown in illustration 5 at the right.

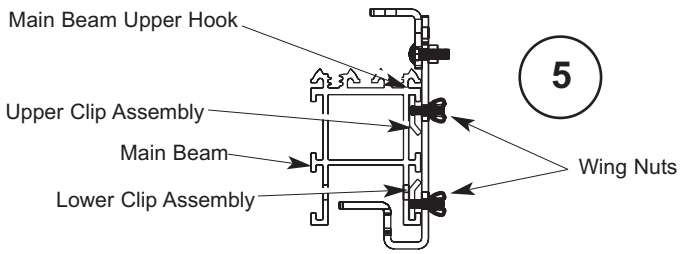

5

STAIRWAY ATTACHMENT CONTINUED

ATTACH A STAIRWAY ATTACHMENT TO A DECK SPANNER BEAM

Attach the Stairway Attachment and Rail Plate Assemblies to a Leveled Deck Spanner Beam as follows.

1. Remove the two Rail Plate Assembly Upper Flanges as follows.
   a. Remove the two Hex Nuts, 3/8-16 from each Carriage Bolt that fastens each Rail Plate Assembly Upper Flange to the Rail Plate Assemblies as shown in illustration 1 at the right.
   b. Set the four Hex Nuts aside.
   c. Remove the Rail Plate Assembly Upper Flanges and Carriage Bolts from the Rail Plate Assemblies.

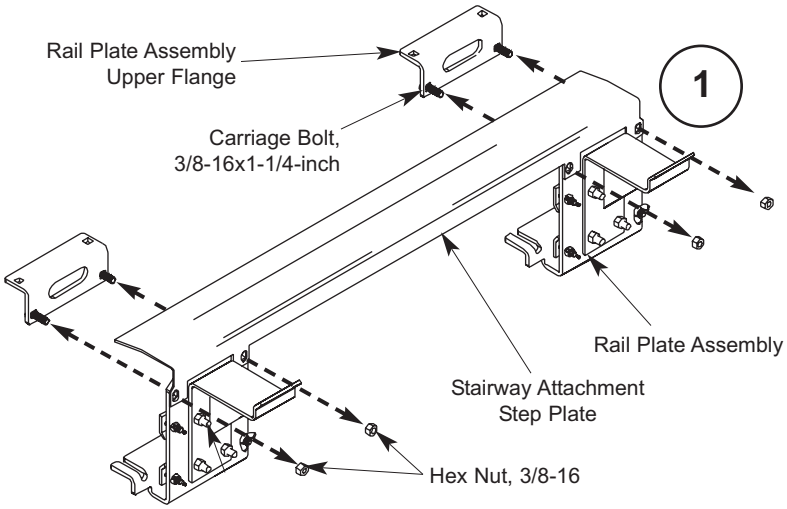

2. Align the Carriage Bolt Heads to the Deck Side Beam Slot and slide the Bolt Heads (four Bolt Heads, two on each Rail Plate Assembly Upper Flanges) into the Deck Side Beam Slot as shown in illustration 2 at the right.

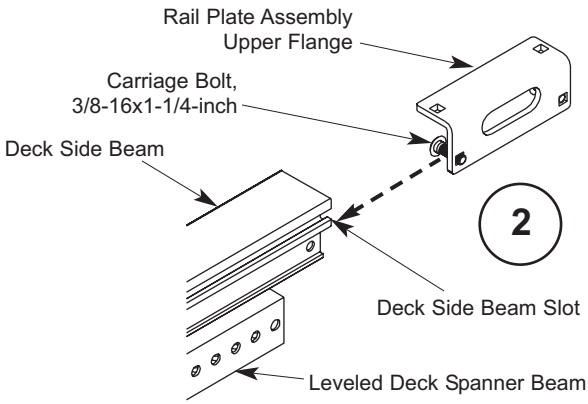

3. Reassemble the Stairway Attachment as follows.
   a. Place a Rail Plate Assembly onto the two Carriage Bolts supporting an Upper Flange.
   b. Repeat step 3a with the other Rail Plate Assembly.
   c. Align the two Rail Plate Assemblies to the clearance holes in the Step Plate and place the Step Plate onto the four Carriage Bolts.
   d. Attach the four Hex Nuts set aside in step 1b to the Carriage Bolts (finger tight).

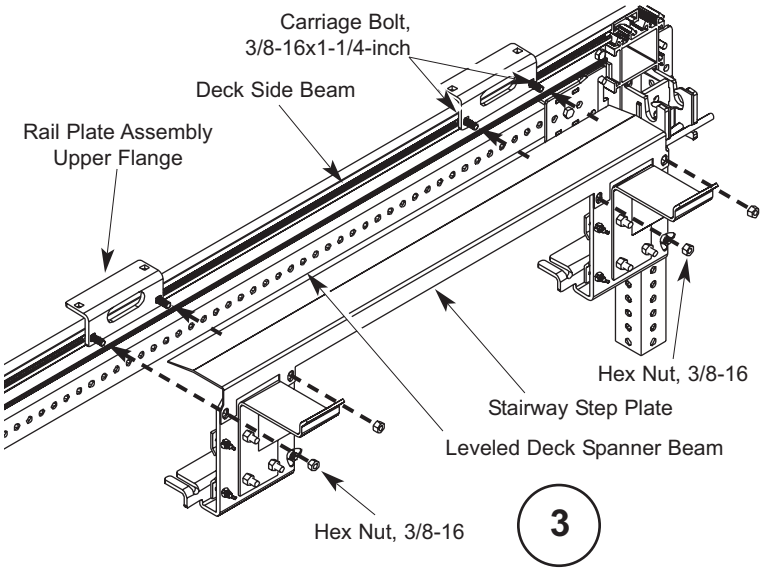

STAIRWAY ATTACHMENT CONTINUED

ATTACH A STAIRWAY ATTACHMENT TO A DECK SPANNER BEAM CONTINUED

4. Position the Stairway Attachment and attach and tighten the four Hex Nuts with a 9/16-inch Open-end Wrench.

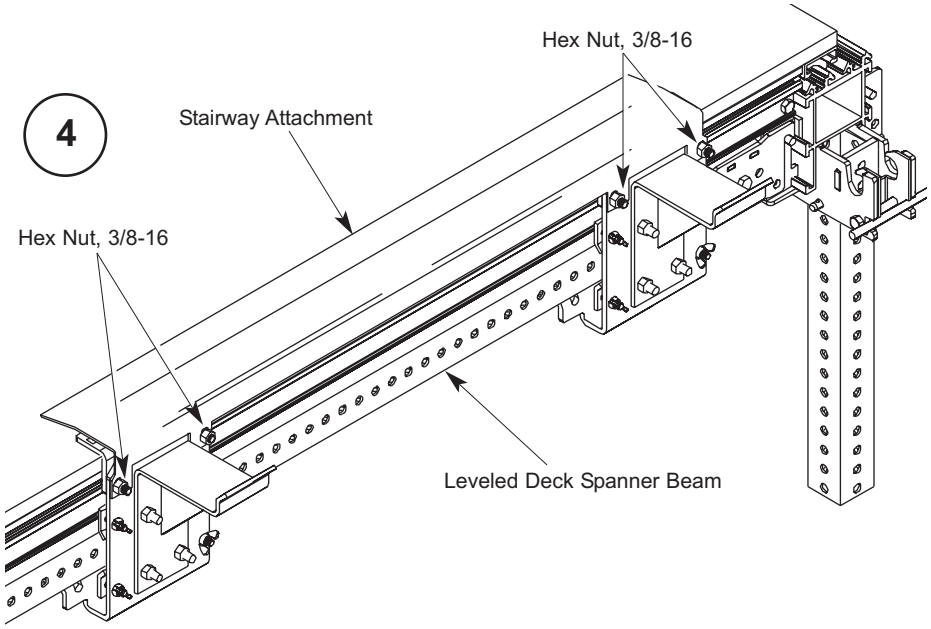

5. Attach each Rail Plate Assembly Lower Flange to the Spanner Beam as follows.
   a. Insert two Carriage Bolts, 3/8-16x3-inches, upward through the two Rail Plate Assembly Lower Flange Slots and clearance holes in the Spanner Beam as shown in illustration 5 at the right. Make sure that the square neck of each Carriage Bolt fits into a Lower Flange Slot.
   b. Using the 9/16-inch Open-end Wrench, attach and tighten a Hex Nut, 3/8-16, to each Carriage Bolt.

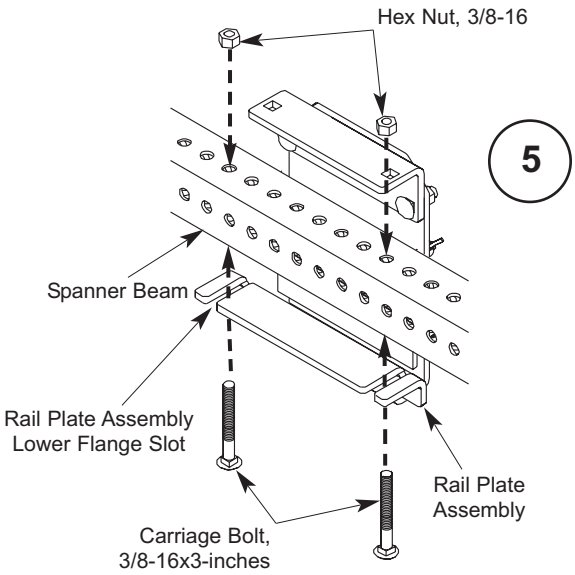

Deck and parts of the Guardrail and Rail Plate Assembly are not shown for clarity.

ARTICULATING LEVELING FOOT

Warning! ***Never exceed a maximum load limit of 8,000-pounds (3636 Kg) for each Articulating Leveling Foot. Failure to observe this warning can result in serious injury and damage to property!***

Note: When using the Articulating Leveling Foot on finished floor surfaces, ***always place a pad*** between the floor surface and the Foot to prevent scratching the floor surface.

Install the Articulating Leveling Foot as follows.

1. Screw an Articulating Leveling Foot into the Leveling Plate Nut so that the Threaded Shaft is about half-way into the Leveling Plate Nut. Use a 1-1/8-inch open end wrench if necessary.

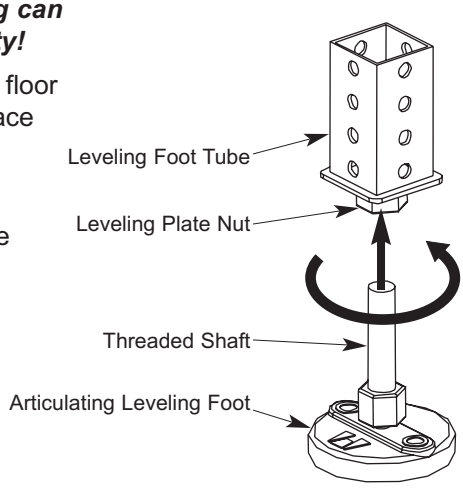

2. Slide the Leveling Foot Tube onto a Telescoping Leg as far as possible, aligning the Perforated Holes.

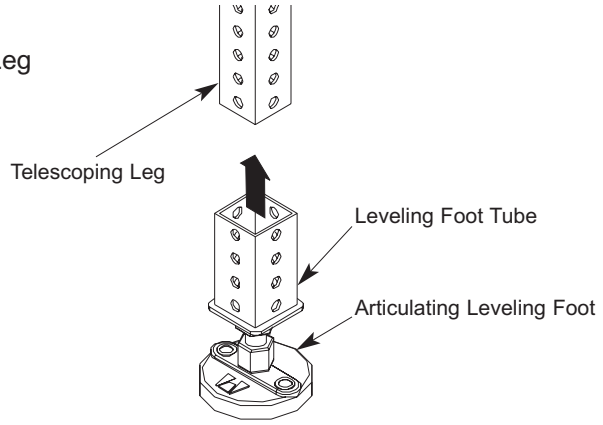

3. Insert a Hex Head Screw, 3/8-16x2-1/2-inch, through at pair of the Holes at the top of the Leveling Foot Tube and fasten a Locknut, 3/8-16, to the Hex Head Screw with a pair of 9/16-inch combination wrenches.

4. Use a 1-1/8-inch open end wrench and adjust the height.
   a. Turning the Leveling Foot Nut clockwise extends the Foot (lifts the floor).
   b. Turning the Leveling Foot Nut counterclockwise retracts the Foot (lowers the floor).

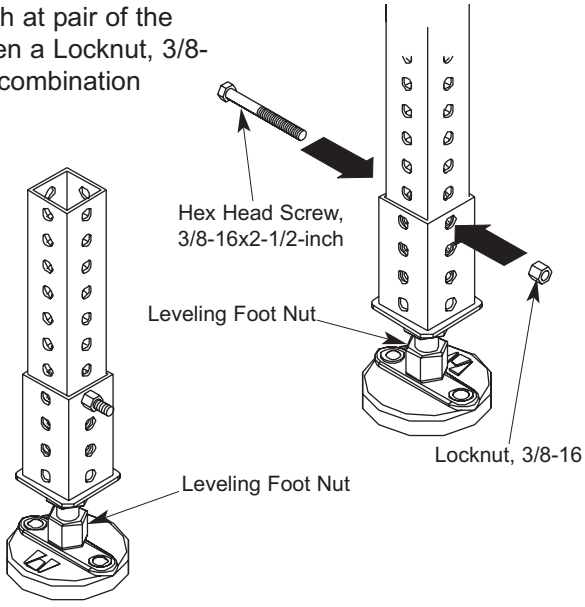

CROSS BRACING

Cross Bracing is available in two sizes — three-foot and four-foot.

Warning! Cross Bracing is required for all stages 48-inches (1.22 m) or higher. Failure to observe this warning can result in death, serious injury, and damage to property!

Note: Cross Brace Assemblies are always installed in pairs. One Assembly must be assembled in the parallel with a Main Beam and one Assembly must be parallel with a Spacer Beam. For specific information regarding the location of Cross Bracing and the Cross Bracing Size (three-foot or four-foot) contact Wenger Corporation.

1. Using a pair of 9/16-inch combination wrenches, attach a Cross Brace Assembly to a pair of Telescoping Legs with four Locknuts, 3/8-16, and four Hex Head Screws, 3/8-16x2-3/4-inches, as shown below.
2. Attach other Cross Brace Assemblies in the same as step 1.
3. Make sure that all fasteners attaching the Cross Brace Assemblies to Telescoping Legs are tight.

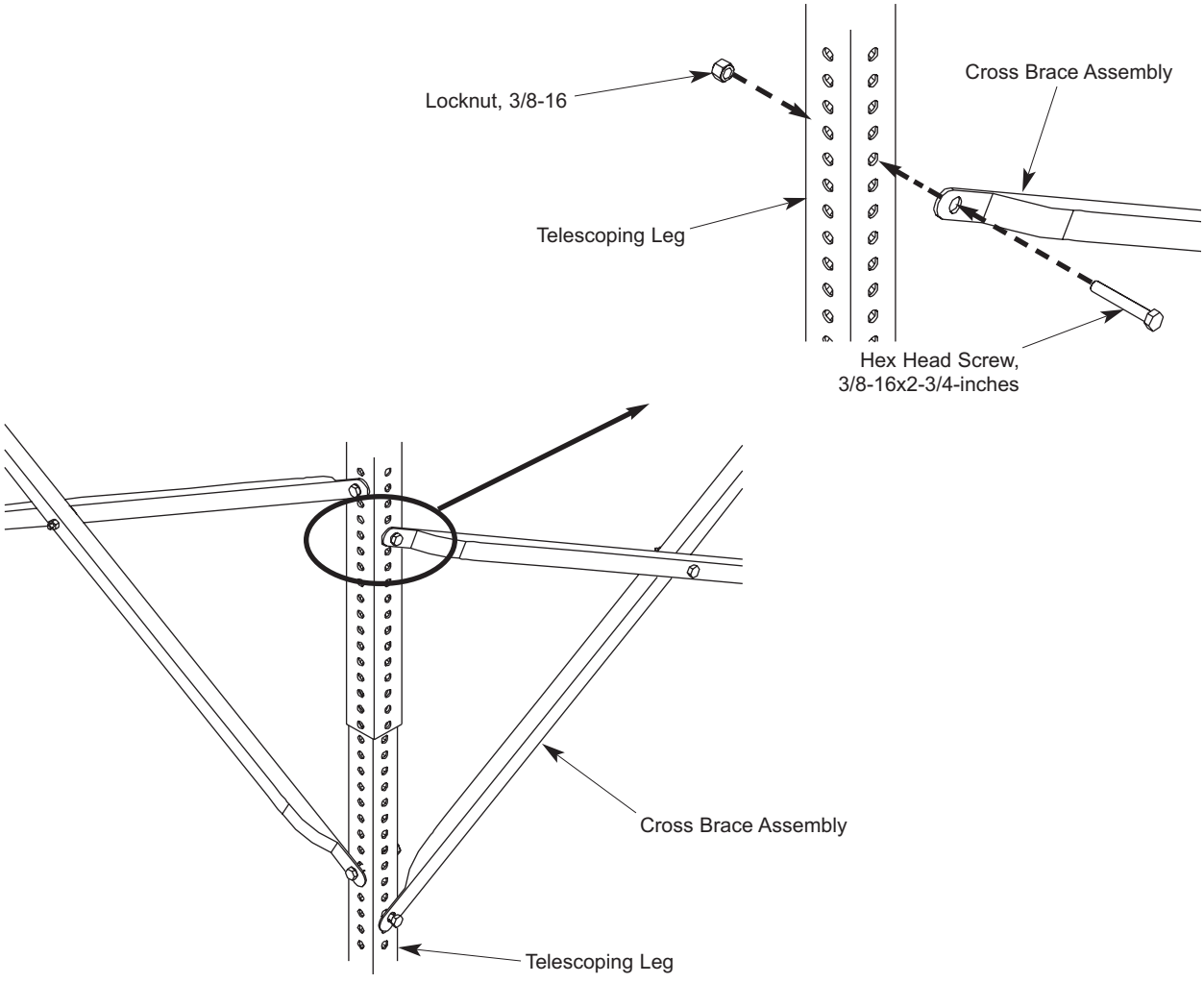

WARRANTY

Event Staging and Tent Floor Accessories are guaranteed free of defects in materials and workmanship for five full years.

The Warranty is void if plywood not meeting minimum specifications outlined in this manual is used in the construction of the deck or if the assembly procedure outlined in this manual is not followed.

Our guarantee assures you of either a full refund or repair or replacement of the defective materials or workmanship without charge, at the discretion of our Customer Service Department. Just call a Customer Service Representative at 1-800-887-7145 and state the reason you are dissatisfied. If a product return is necessary, your representative will issue a return authorization. This is your sole remedy for breach of this warranty.

Should you have a question or problem with any Wenger product, don't hesitate to call, even if the product is past warranty. It's important to us that all of our customers are satisfied.

This is the sole warranty made by Wenger. Wenger disclaims all other warranties, including the warranties of merchantability and fitness for a particular purpose, as well as all liability for incidental, consequential, special, and indirect damage. Wenger liability for direct damages shall be limited to the amount you paid for the product involved. Wenger reserves the right to make product changes without obligation to incorporate such changes into products previously sold.

Some states do not allow the exclusion or limitation of damages or warranties, so the above may not apply to you. This warranty gives you specific legal rights. You may also have other rights which vary from state to state.